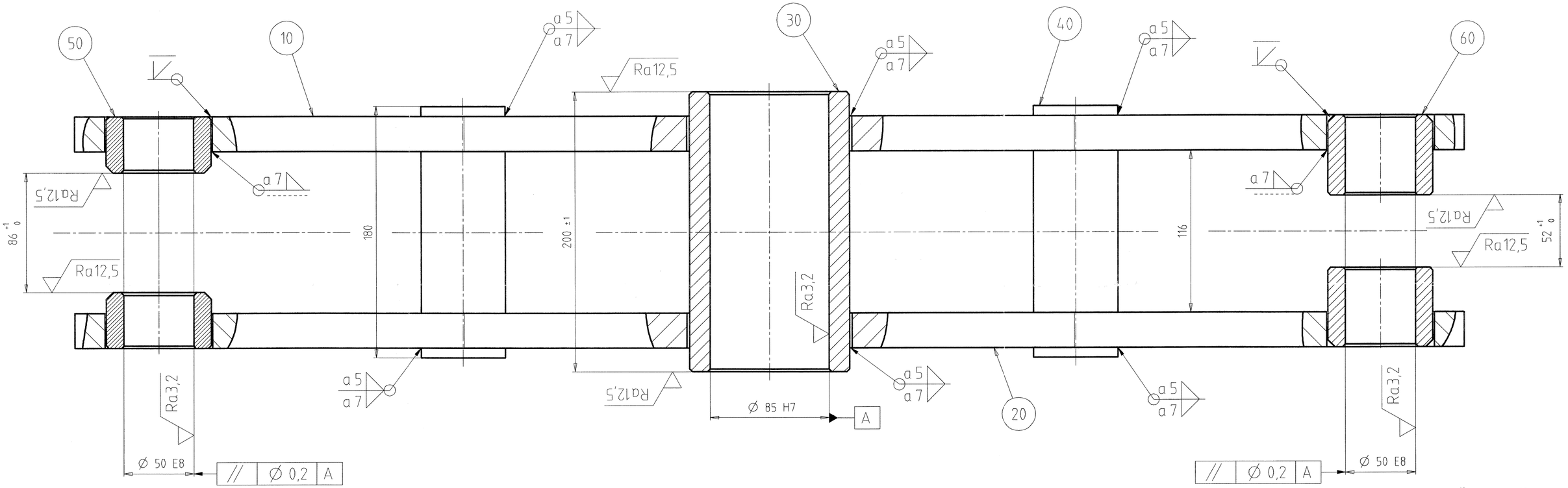

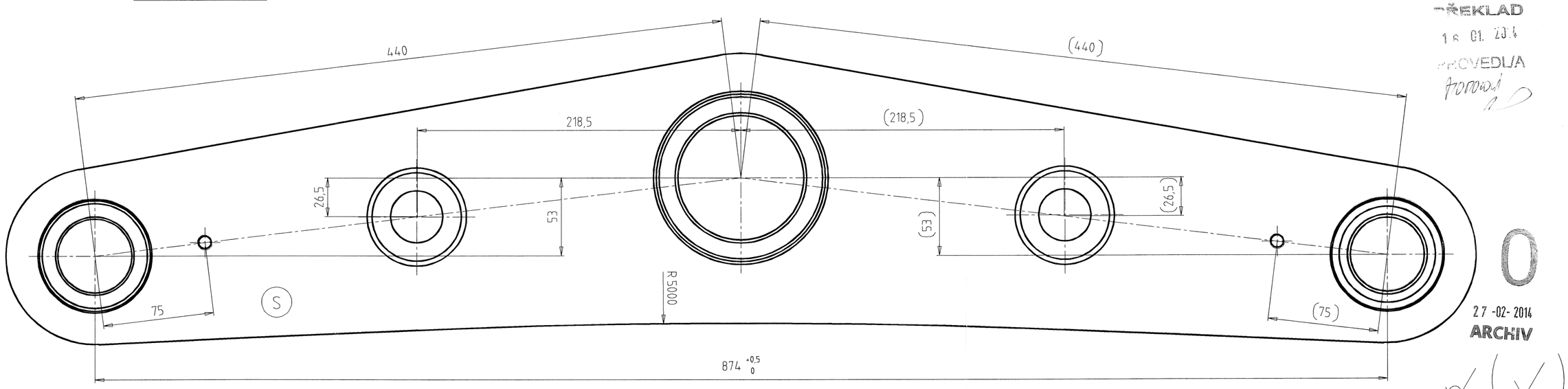

PŘEKLAD
16. 01. 2014
PROVEDLA

0

27-02-2014
ARCHIV

NZ 14/00096

Scale 1:10

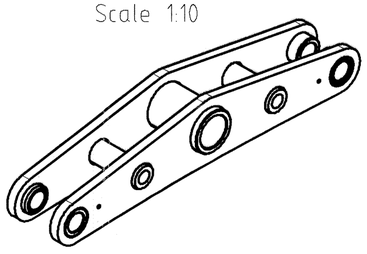

IDENTIFIKAČNÍ ČÍSLO VÝROBCE PODLE PRACOVÁKA STANDARTU NO. 71 POLOŽKA 5

S Manufacturer's identification number according to work-standard No 71 subitem 5.1

PC NO	PART NAME	DOC-NR	DOC-VER	MATERIAL	QTY
60	Anschweißbuchse 50x 75x 57mm	2000119094	00	BS03	2
50	Anschweißbuchse 50x 75x 40mm	2000119089	00	BS03	2
40	HZ-Verstärkungsrohr Umlenkhebel LS 935	2000119084	00	BS03	2
30	Anschweißbuchse 83x114,3x200mm	2000119080	00	BS03	1
20	HZ-Seitenteil Umlenkhebel rechts 935-1	2000119079	00	BS03	1
10	HZ-Seitenteil Umlenkhebel links 935-1	2000119078	00	BS03	1

APPROVED FOR Serienfrei (F4)

Welding Construction according to "Werknorm 43"
Surface Quality according to "Werknorm 40"
Theor. Weight according to "KR001-2003"
Material according to "Werknorm 51"

Projection see: ISO 128	Surface Quality ROH				
Scale 1:2	Originale-Size A2	Standard Color			
		Name	Date	Count	Change
Bend Tolerance see DIN 6930 - 2 - m		WDEF_GAUDEPE	13.09.2012	Material	
Welding Tolerance see DIN EN ISO 13920-BF					
General Tolerance see DIN ISO 2768 - mK					
Surface Condition see DIN ISO 1302					
Laser-Cut Tolerance see DIN 2310-5-IL up to 3mm / -IK over 3mm					

WDEF_GAUDEPE	13.09.2012		
Name	Date	DCM-Nr.	
Theor. Weight [kg]	61.761		

Name **Umlenkhebel geb.Mb.80 Zb.50**

Additional Text

Sheet /

Mat-Nr. 1000278210 | Doc-Nr 2000119096 | Version 00

Copyright reserved to ISO 16016